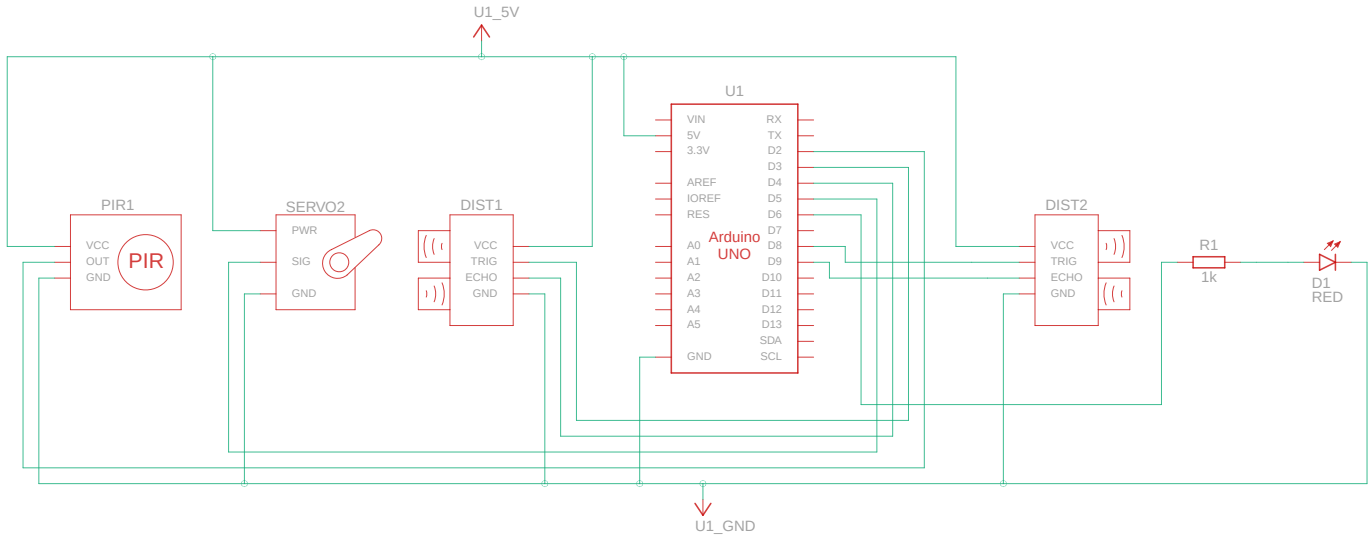

Made with Tinkercad®

Title: VigiAI

Date: 6/21/2025, 6:36:50 AM

Sheet: 1/1